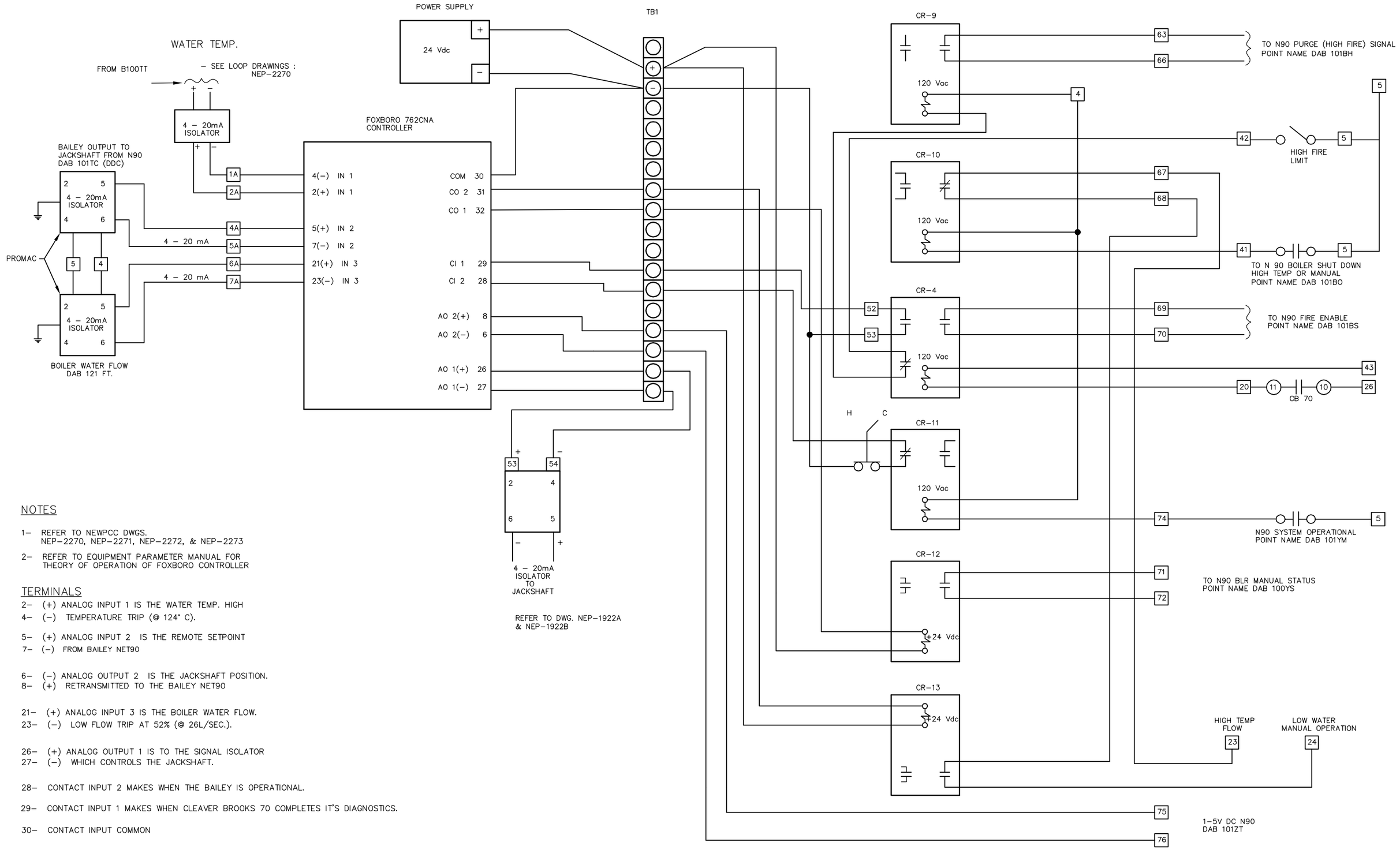

NOTES

1– REFER TO NEWPCC DWGS.
NEP–2270, NEP–2271, NEP–2272, & NEP–2273

2– REFER TO EQUIPMENT PARAMETER MANUAL FOR THEORY OF OPERATION OF FOXBORO CONTROLLER

TERMINALS

2– (+) ANALOG INPUT 1 IS THE WATER TEMP. HIGH
4– (–) TEMPERATURE TRIP (@ 124° C).

5– (+) ANALOG INPUT 2 IS THE REMOTE SETPOINT
7– (–) FROM BAILEY NET90

6– (–) ANALOG OUTPUT 2 IS THE JACKSHAFT POSITION.
8– (+) RETRANSMITTED TO THE BAILEY NET90

21– (+) ANALOG INPUT 3 IS THE BOILER WATER FLOW.
23– (–) LOW FLOW TRIP AT 52% (@ 26L/SEC.).

26– (+) ANALOG OUTPUT 1 IS TO THE SIGNAL ISOLATOR
27– (–) WHICH CONTROLS THE JACKSHAFT.

28– CONTACT INPUT 2 MAKES WHEN THE BAILEY IS OPERATIONAL.

29– CONTACT INPUT 1 MAKES WHEN CLEAVER BROOKS 70 COMPLETES IT'S DIAGNOSTICS.

30– CONTACT INPUT COMMON

31– CONTACT OUTPUT 1 ENERGIZES CR–12 WHICH INDICATES TO THE BAILEY THAT THE BOILER IS IN MANUAL.

32– CONTACT OUTPUT 2 ENERGIZES CR–13 WHICH INDICATES AN ALARM CONDITION WHICH IN TURN THE BAILEY SHUTS DOWN THE BOILER.

NO.	REVISIONS	DATE	BY
10).	GENERAL REVISIONS	01.00	EN

B.M. ELEV.

NO.	REVISIONS	DATE	BY
9).	GENERAL REVISIONS	06–99	TM
8).	GENERAL REVISIONS	05–99	GMZ
7).	REPLACED CONTROLLER	04–99	AE
6).	GENERAL REVISIONS	05–95	WKT
5).	GENERAL REVISIONS	01–94	MBD
4).	GENERAL REVISIONS	08–93	WKT
3).	GENERAL REVISIONS	07–93	MBD
2).	GENERAL REVISIONS	01–93	TM
1).	GENERAL REVISIONS	03–93	MBD

DESIGNED BY R.G. SALES CO.
CHECKED BY A. EINARSON
DRAWN BY MBD TM
APPROVED BY
HOR. SCALE N.T.S.
VERTICAL
RELEASED FOR CONSTRUCTION FEB. 1984
DATE FEBRUARY 1993
DATE

ENGINEER'S SEAL

PLOT DATE JULY 07, 1999

THE CITY OF WINNIPEG
WORKS AND OPERATIONS DIVISION
WATERWORKS WASTE AND DISPOSAL DEPARTMENT

NORTH END WATER POLLUTION CONTROL CENTRE

BOILER 1 CONTROLLER

SHEET 4 OF 4

CITY DRAWING NUMBER

NEP–1922D1

O:DRAWING/NEP/NEP122D1